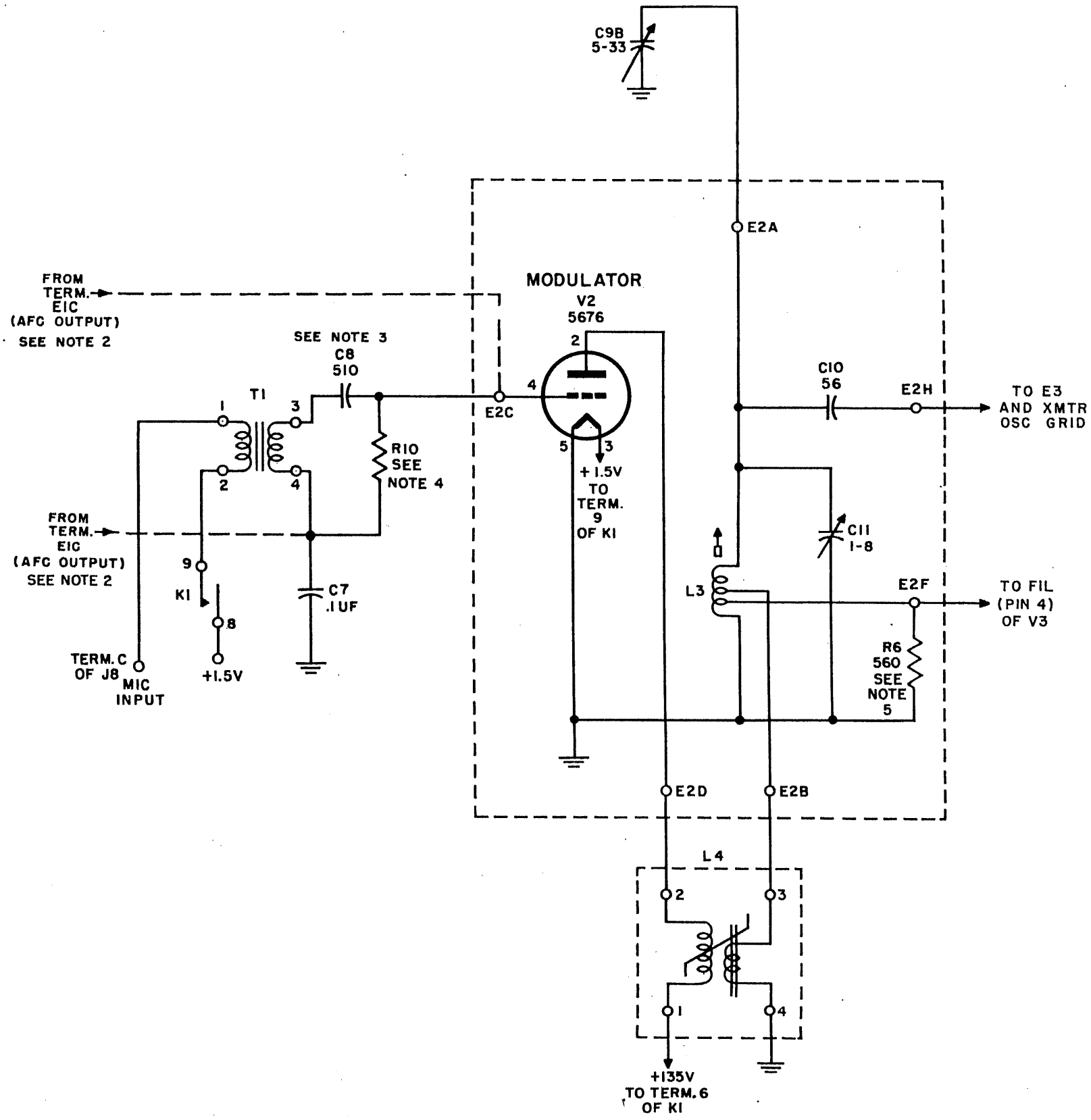

NOTES:

1. UNLESS OTHERWISE SHOWN, RESISTORS ARE IN OHMS, CAPACITORS ARE IN UUF.

2. TERMINAL EIC IS CONNECTED TO TERMINAL 4 OF T1 IN ALL MODELS OF RADIO SETS AN/PRC-8 AND 9, AND IN EARLY MODELS OF RADIO SET AN/PRC-10. EIC IS CONNECTED TO E2C IN THE FOLLOWING MODELS OF RADIO SET AN/PRC-10:

ORDER NO.	SERIAL NOS.
15176-PHILA-52	4001 THRU 12433
15178-PHILA-52	LATER MODELS
3432-PHILA-52	ALL MODELS

3. C8 IS REPLACED BY A NEW R12 IN THE FOLLOWING MODELS OF RADIO SET AN/PRC-10:

ORDER NO.	SERIAL NOS.	VALUE OF R12
15176-PHILA-52	4001 THRU 4342	82K
15176-PHILA-52	4343 THRU 12433	120K
15178-PHILA-52	LATER MODELS	120K
3432-PHILA-52	ALL MODELS	120K

4. VALUES OF R10 FOR DIFFERENT MODELS OF THE RADIO SETS ARE SHOWN IN THE FOLLOWING CHART:

ORDER NO.	VALUE IN OHMS		
	AN/PRC-8	AN/PRC-9	AN/PRC-10
1758-PHILA-51	8,200	6,800	5,600
3153-PHILA-51	8,200	6,800	5,600
3374-PHILA-52	8,200	6,800	5,600
15176-PHILA-52	8,200	6,800	5,600 (SERIAL NOS. 1 THRU 4000)
			8,200 (SERIAL NOS. 4001 THRU 4342)
			18K (SERIAL NOS. 4343 THRU 12433)
15178-PHILA-52	———	———	5,600 (EARLY MODELS) 18K (LATER MODELS)
3432-PHILA-52	———	———	18K

TM 4065-8

Figure 14. Modulator circuit.